GB0710
08.11

Siv-inn PP and PK

Diffuser for displacement ventilation
Embedded mounting system

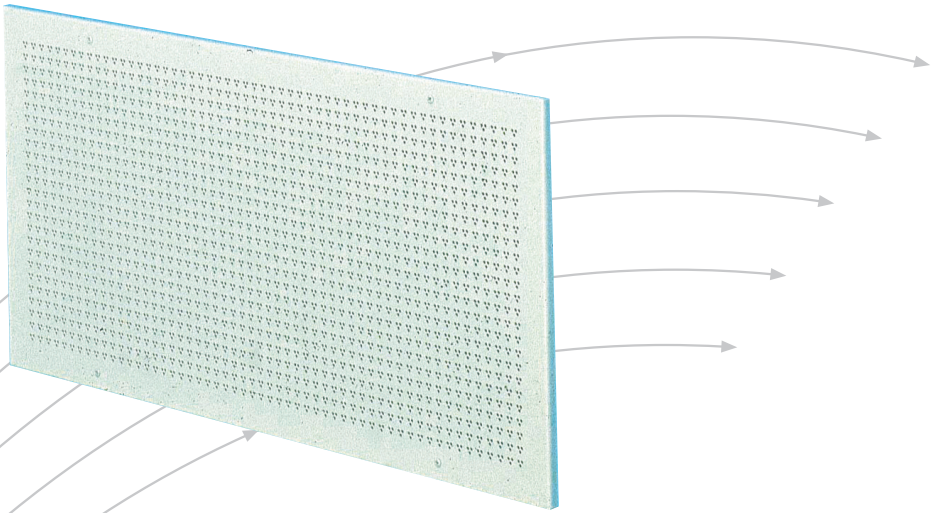

- Design-protected perforation
- Available with or without plenum box
- Made-to-measure solutions

TROX® TECHNIK

Auranor

TROX Auranor Norge AS

PO Box 100
NO-2760 Brandbu

Telefon +47 61 31 35 00
Telefaks+47 61 31 35 10
e-mail: firmapost@auranor.no
www.trox.no

Siv-inn PP and PK

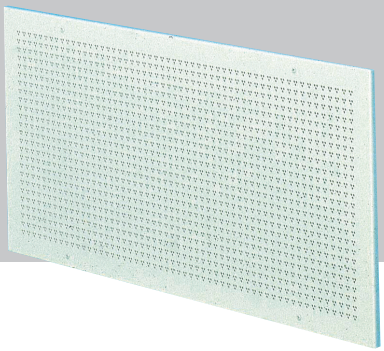

APPLICATION

The Siv-inn panel is a customised product offering every solution imaginable in terms of tailored displacement units, and is available as a made-to measure solution as well as with prefabricated plenum boxes suitable for both wall and ceiling mounting. Grilles measuring over 2 m^2 are split.

DESIGN

Siv-inn PP and PK are available in two standard designs with width/ height measurements to the nearest millimetre.
Featuring a flush flange, type PP is an ideal slot-in solution. Type PK is equipped with a bracket flange and is installed as a protruding unit.
Siv-inn PK comes with screw holes fitted with gaskets and spacers, and the screws are in a white enamel finish. The front is perforated (15 %) with our clover pattern.

MATERIALS AND SURFACE COATING

Both types are equipped with a permanent galvanized diffuser plate.
The front comes in a RAL 9010 finish as standard.

QUICK SELECTION

	[m^3/h]		
Siv-inn PP/PK	25 dB(A)	30 dB(A)	35 dB(A)
	750	900	1100

Table 1: The table shows air flow rates at given sound power levels (per m2 of active area).

ORDER CODE, SIV-INN PP/PK

Siv-inn - PP - 500 - 800 / 0 - 0

Product
Type:
PP = Flush flange
PK = Bracet flange
Width: (mm.)
Hight: (mm.)
SL = Special finish
SM = Special material

Example:
Siv-Inn-PP-500-800 / 0-0
Explanation:
Siv-inn front with flush flange, width: 500 mm and height: 800 mm.

ORDER CODE, Siv-inn PP/PK Box

Siv-inn - K - 450 - 750 - 100 - 160 - 2 / 0 - 0

Product
K = Box
Width, (mm.):
Hight, (mm.):
Depth, (mm.):
Spigot diameter
Spigot entry:
1, 2 or 3. See fig. 2
S = With damper
L = Sound attenuation

Example:
Siv-Inn-K-450-750-100-160-2 / 0-0
Explanation:
Siv-inn box, width: 450 mm, height: 750 mm, depth: 100. Spigot Ø160 in position 2 as per fig. 2.

DIMENSIONS AND WEIGHT, SIV-INN PP/PK

Weight: approx. 15 kg/m^2.
Recomended groove: B+5 and H+5.

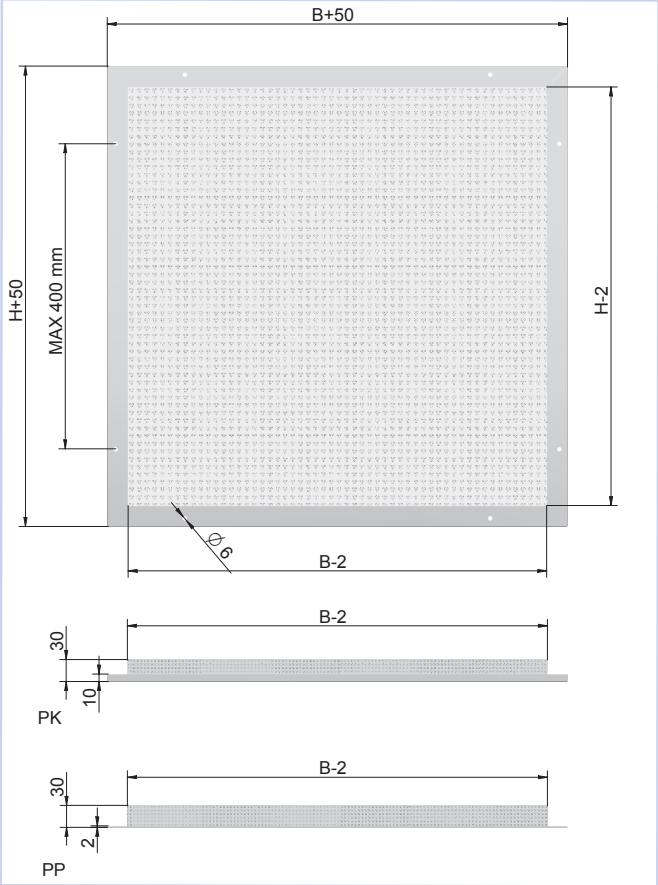

Fig. 1: Siv-inn PP and PK

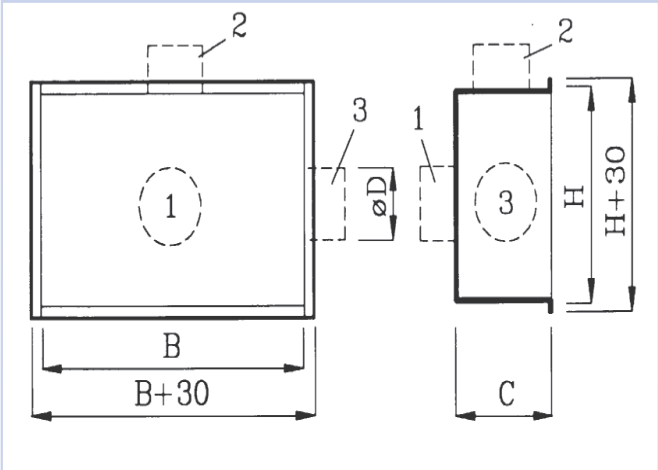

Fig. 2: Spigot entry pos. 2 or pos. 3 requires a minimum C-dimension of: øD + 30.

Siv-inn PP and PK

ACOUSTIC DATA

The diagram provides a summary of the A-weighted sound power level from diffuser, L_{WA}. Stated air flow rate is per m^2 active front area. Correction factors in table 2 are used to calculate emitted sound power level at the respective frequencies, $L_W = L_{WA} + KO$. A room with absorption equivalent to $10m^2$ Sabine will have a sound pressure level which is 4 dB below the sound power level emitted.

Example:
A hall requires an air supply of 125 l/s, and for this purpose a Siv-inn PP 1000x500 is used. Room attenuation is 6 dB. The air flow rate per m^2 is then 250 l/s. From the diagram, we find that L_{WA} = 30 dB(A) and the total pressure loss is 29 Pa.

We aim to find:

a) Emitted sound power level from the diffuser at 250 Hz.
b) A-weighted sound pressure level in the room.

a) According to table 3, the correction factor for 250 Hz is -1 dB. L_W at 250 Hz is thus: $L_{WA} + KO = 30 + (-1) =$ 29 dB
b) A room attenuation equivalent to 6 dB provides a sound pressure level in the room of: 30 - 6 = 24 dB(A)

CALCULATION DIAGRAM

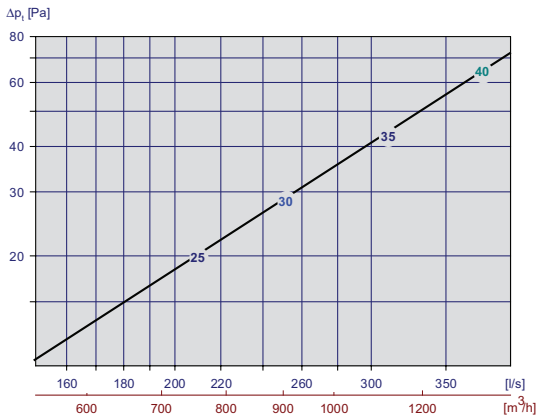

Diagram 1: Capacity per m^2 active area.
Applies to installation 2, fig. 4

Correction factor [KO], Siv-inn PP and PK

Siv-inn PP	KO [dB]							
Siv-inn PK	63	125	250	500	1k	2k	4k	8k
	1	1	-1	-2	-6	-13	-17	
-15								

FLOW PATTERN

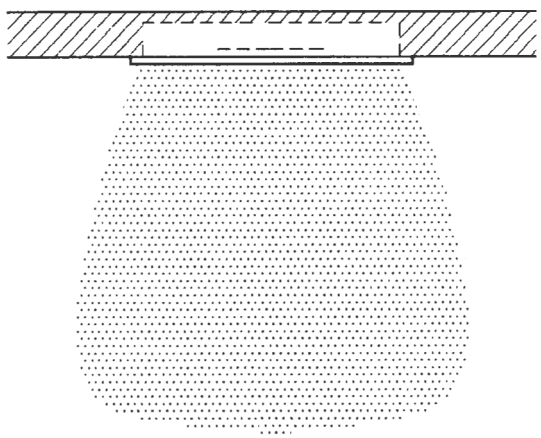

Fig. 3

Siv-inn PP and PK

INSTALLATION

In order to avoid leaks, it is of utmost importance that the area between grille and spigot is properly sealed. Various installation alternatives are provided in fig. 4.

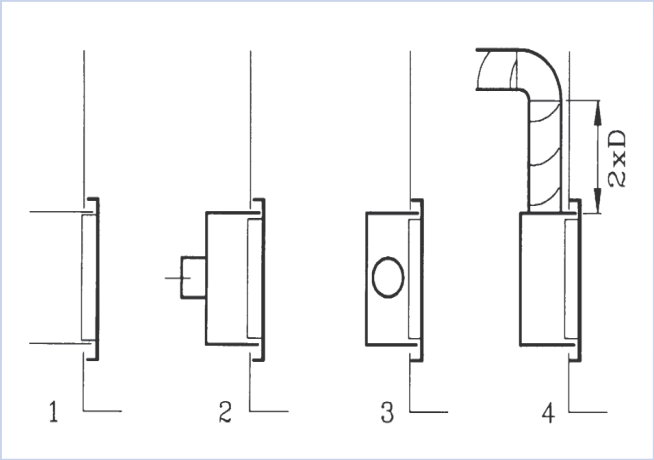

Fig. 4

COMMISSIONING

The air flow rate is determined by measuring the pressure at the front-centre nipple, and is calculated by using the following formula:

$$q[l/s] = K \times \sqrt{\Delta p_i [Pa]} \times A_{eff}.$$

where K= 149
Pi= the pressure measured in a perforated hole in the clover pattern [Pa].
Aeff. = net panel area [m²]

MAINTENANCE

The diffuser can be cleaned by using a damp cloth. When cleaning the duct network, the valve front must be removed in order to gain access to the duct.

ENVIRONMENT

Enquiries regarding product declaration can be directed to our sales team, or information can be found at our website: www.trox.no

Siv-inn PP og PK is developed and manufactured by:

The company reserves the right to make amendments without prior notice.

www.dmt.no

TROX® TECHNIK
Auranor

Head Office:
TROX Auranor Norge AS, PO Box 100, NO-2712 Brandbu
Telephone: +47 61 31 35 00 Fax: +47 61 31 35 10 www.trox.no